NEW CONSTRUCTION BRACKET DETAIL

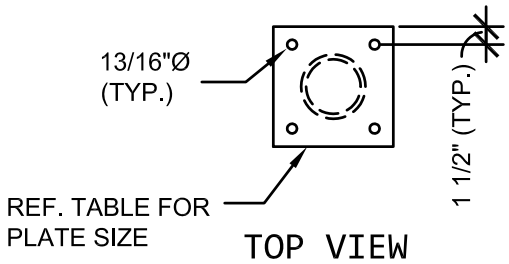

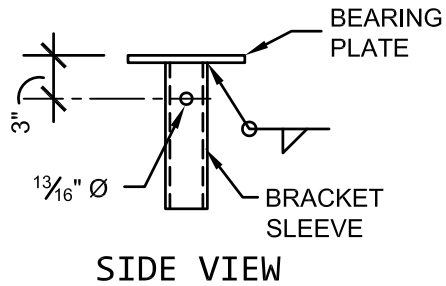

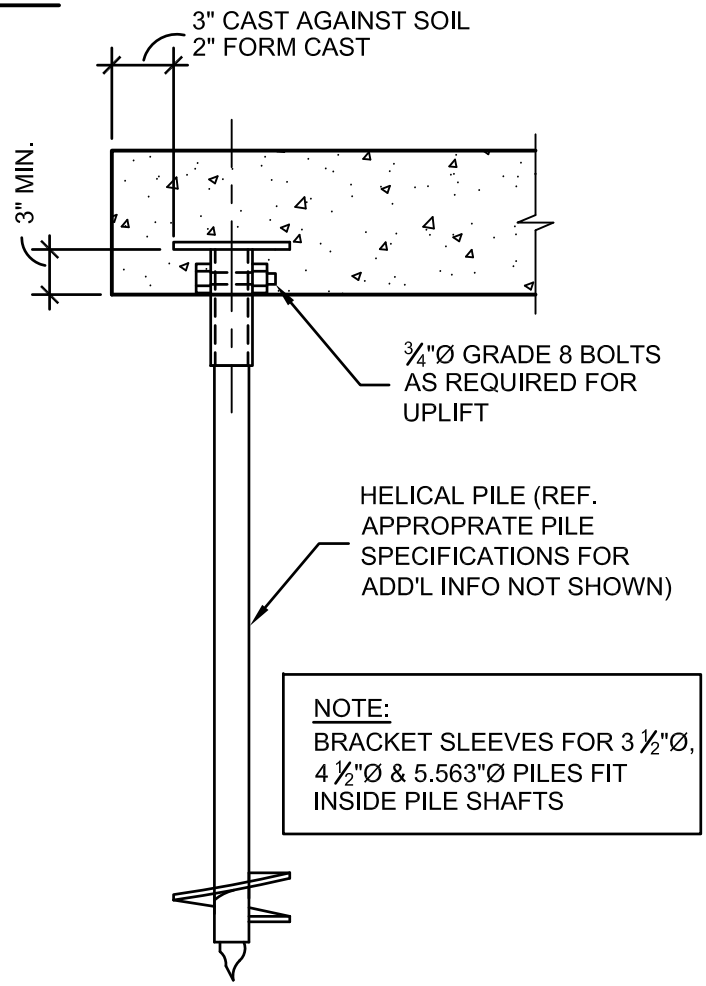

NOTE:
BRACKET SLEEVES FOR 3 ½"Ø, 4 ½"Ø & 5.563"Ø PILES FIT INSIDE PILE SHAFTS

TYPICAL BRACKET w/
PILE ASSEMBLY DETAIL

STANDARD NEW CONSTRUCTION BRACKET CHART				
PART NUMBER	DIAMETER OF PILE	ALLOWABLE LOAD CAPACITY	BEARING PLATE SIZE	BRACKET SLEEVE AND LENGTH
4074	2 ⅜"	24.2 KIPS	PL ⅝" x 8" x 0'-8	2 ⅞"Ø x 0'-8
4075	2 ⅞"	20.6 KIPS	PL ⅝" x4" x 0'-8	3 ½"Ø x 0'-10
4079	2 ⅞"	36.5 KIPS	PL ⅝" x 8" x 0'-8	3 ½"Ø x 0'-10
4076	3 ½"	65.1 KIPS	PL 1" x 9" x 0'-9	2 ⅞"Ø x 0'-10
4077	4 ½"	75.8 KIPS	PL 1" x 9" x 0'-9	3 ½"Ø x 0'-10
RD.1045	5.563"	80 KIPS	PL 1" x 10" x 0'-10	4 ½"Ø x 0'-10

NOTES:

1. POLYETHYLENE COPOLYMER THERMOPLASTIC COATING PER ICC-ES AC 228
2. REFERENCE PRE-CONSTRUCTION BRACKET CHART FOR ALLOWABLE LOAD CAPACITY OF BRACKET ONLY.
3. MANUFACTURER TO HAVE IN EFFECT INDUSTRY RECOGNIZED WRITTEN QUALITY CONTROL AND ASSURANCE FOR ALL MATERIALS AND MANUFACTURING PROCESSES.
4. MANUFACTURER SHALL BE ISO CERTIFIED.
5. ALL WELDING IS TO BE DONE BY WELDERS CERTIFIED UNDER SECTION 5 OF THE AWS CODE D1.1.
6. THE CAPACITY OF THE UNDERPINNING SYSTEM IS A FUNCTION OF MANY INDIVIDUAL ELEMENTS, INCLUDING THE CAPACITY OF THE FOUNDATION, BRACKET, PIER SHAFT, HELICAL PLATE, AND BEARING STRATA, AS WELL AS THE STRENGTH OF THE FOUNDATION BRACKET CONNECTION AND THE QUALITY OF THE INSTALLATION OF THE PILE. YOUR ACHIEVABLE CAPACITIES COULD BE HIGHER OR LOWER THAN THOSE LISTED DEPENDING ON THE ABOVE FACTORS.
7. SEE ICC-ES EVALUATION REPORT ESR-1854 AND RAM JACK ENGINEERING HANDBOOK FOR ALLOWABLE VALUES AND/OR CONDITIONS OF USE CONCERNING MATERIAL PRESENTED IN THIS DOCUMENT.

THIS DRAWING AND ITS CONTENTS ARE CONFIDENTIAL AND THE EXCLUSIVE PROPERTY OF RAM JACK SYSTEMS DISTRIBUTION, LLC. NO PUBLICATION, DISTRIBUTION OR COPIES MAY BE MADE WITHOUT THE EXPRESSED WRITTEN CONSENT OF RAM JACK SYSTEMS DISTRIBUTION, LLC. ALL RIGHTS RESERVED UNDER COPYRIGHT LAWS.

RAMJACK

NEW CONST. BRACKET	CATALOG NO. : SEE TABLES		REV. 1
SCALE 3/4"= 1'-0	DRAWN BY DLW	DATE: 04/30/08	SHEET 1 OF 1